FIGURE 2) 4 GHz DUAL SAMPLER
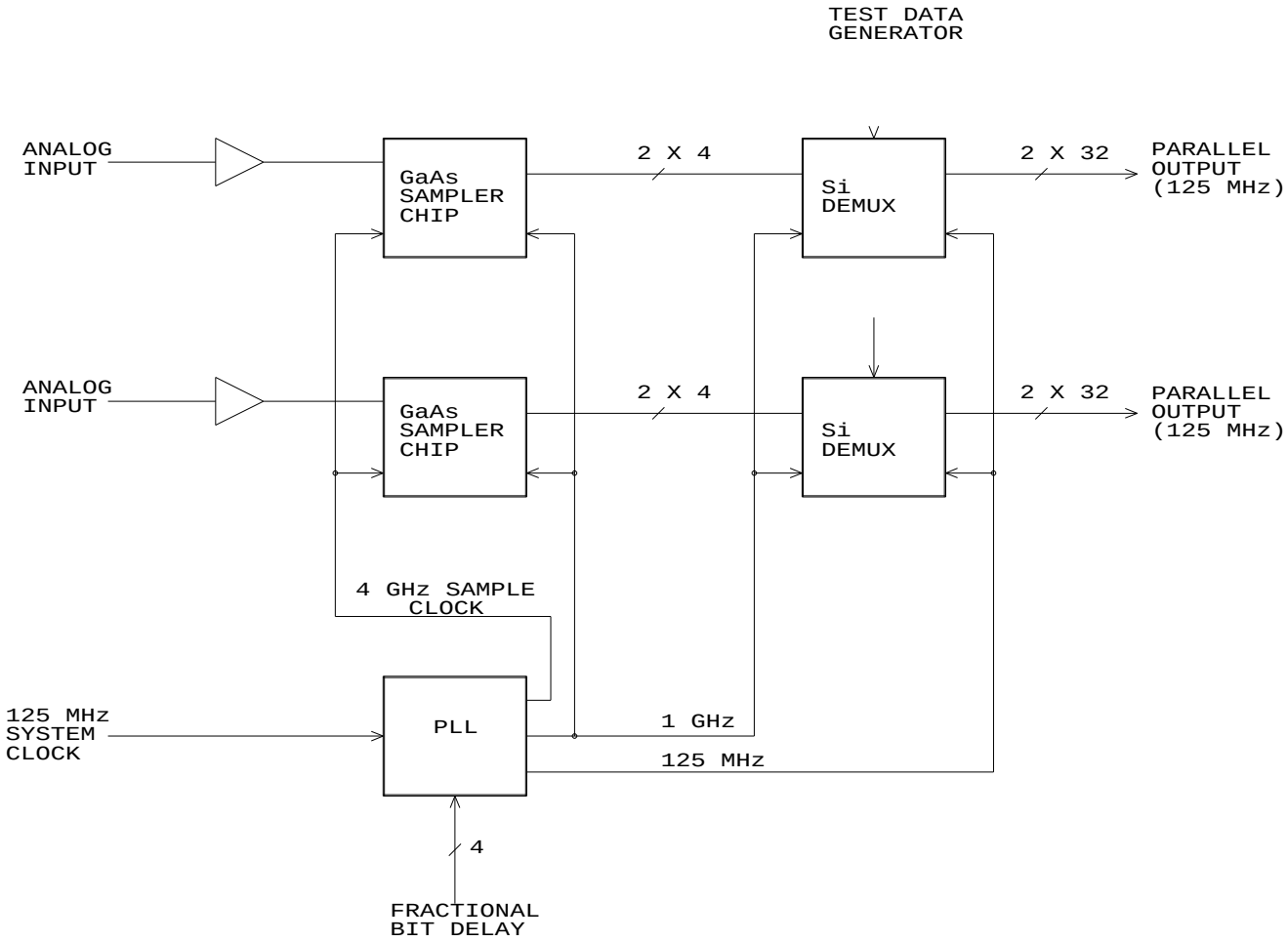
2-BIT, 4-LEVEL SAMPLES ARE TAKEN AT 4 GS/S AND DEMULTIPLEXED BY A FACTOR OF 4 IN A GALLIUM ARSENIDE CUSTOM CHIP. THE OUTPUT IS IN 4 PARALLEL 2-BIT SIGNALS AT ECL LOGIC LEVELS.