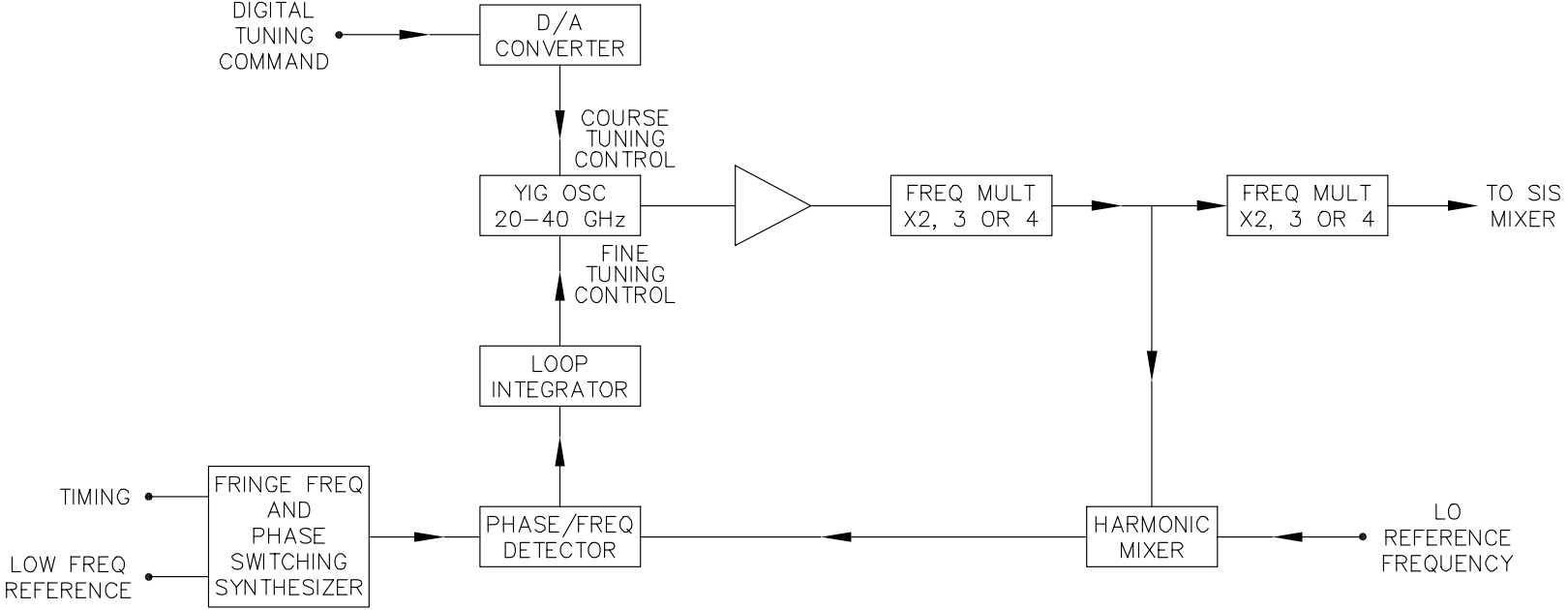

FIGURE 4. PHASE–LOCKED LOOP FOR GENERATION OF THE FIRST LO AT AN ANTENNA, WITH FRINGE ROTATION AND PHASE SWITCHING