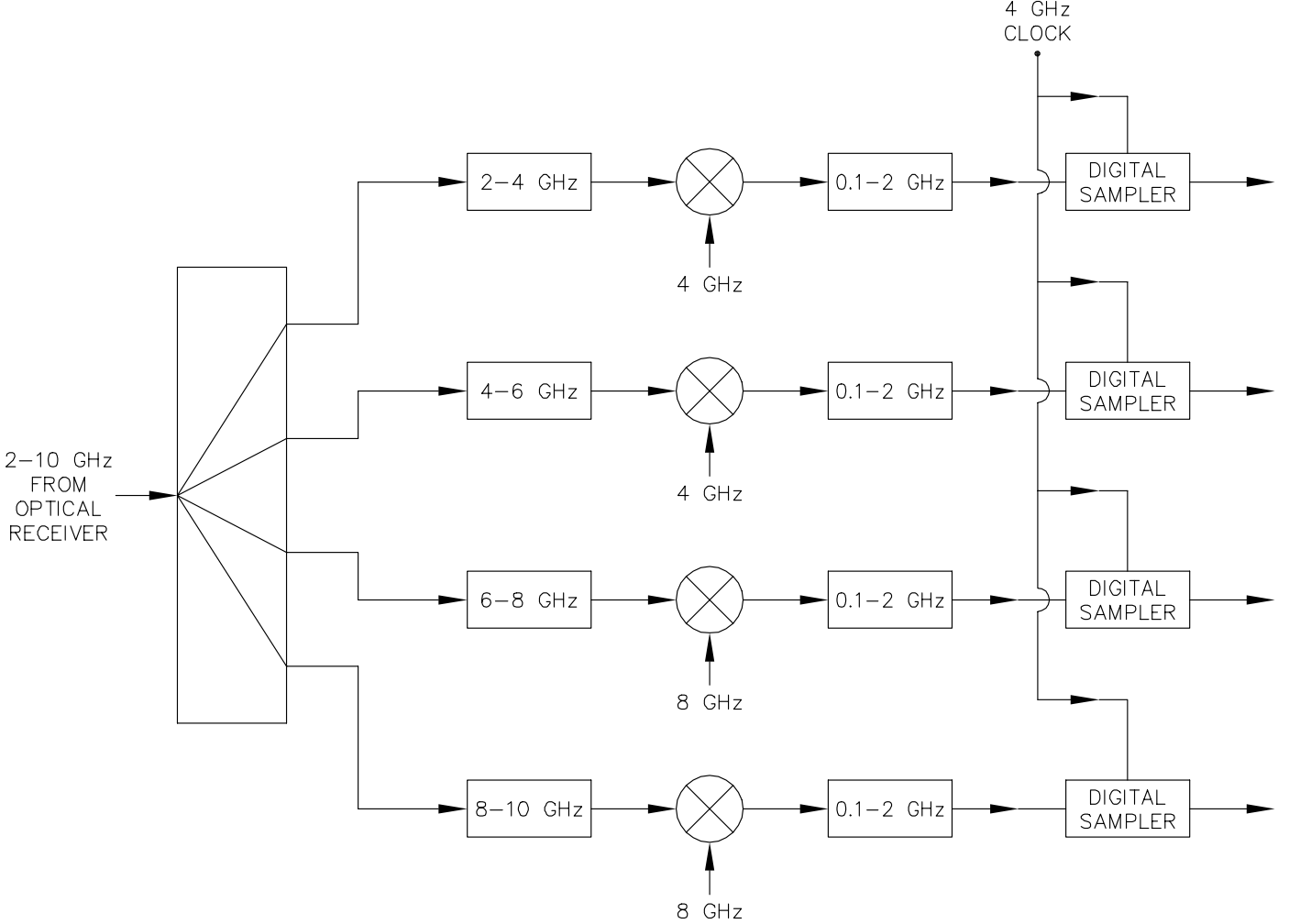

FIGURE 2. FILTERING AND DIGITAL SAMPLING, FOR CONTINUUM OBSERVATIONS, OF THE 8 GHz BANDWIDTH SIGNAL FROM O