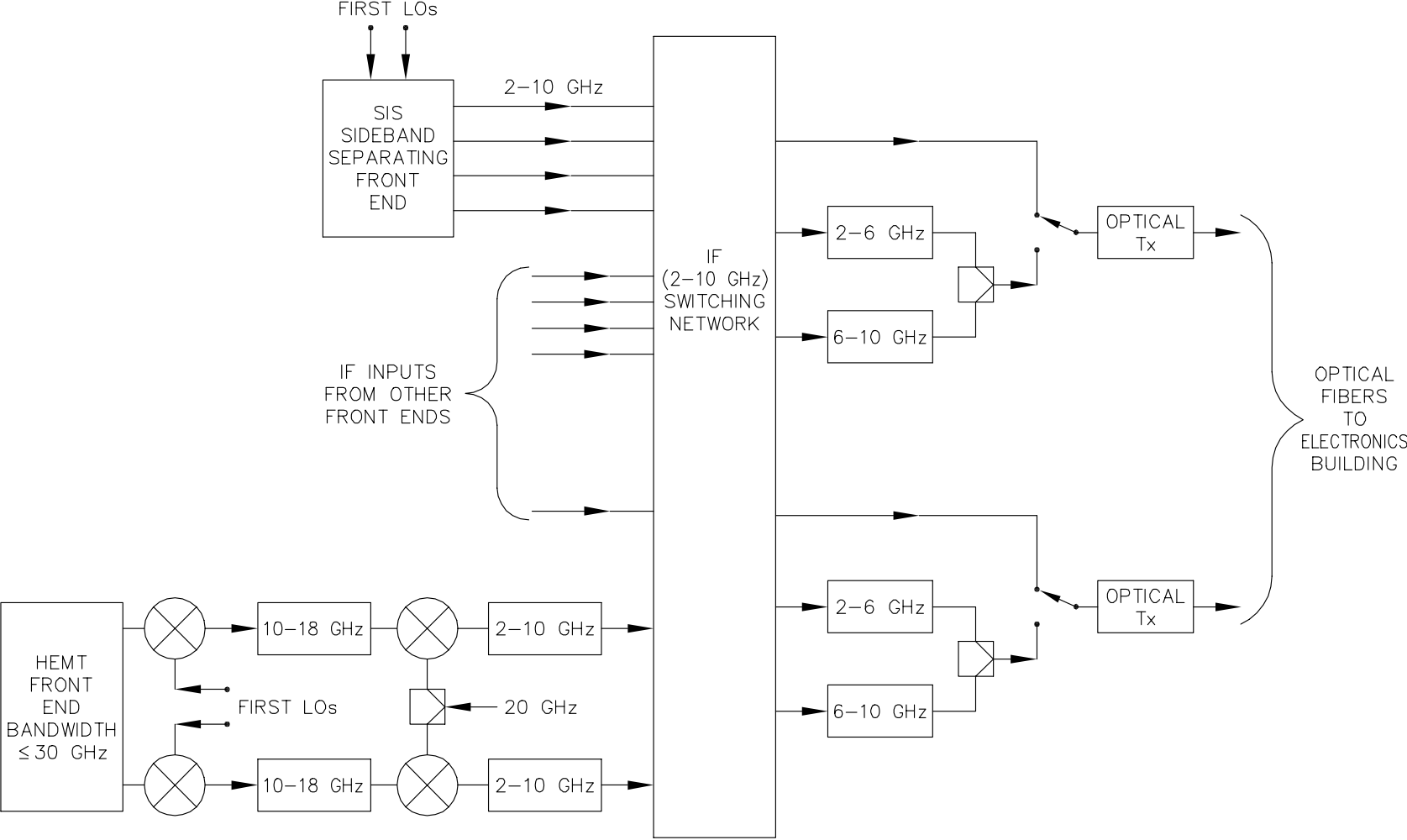

FIGURE 1. THE IF SYSTEM AT AN ANTENNA FOR ANALOG TRANSMISSION OVER TWO FIBERS TO THE CORRELATOR BUILD